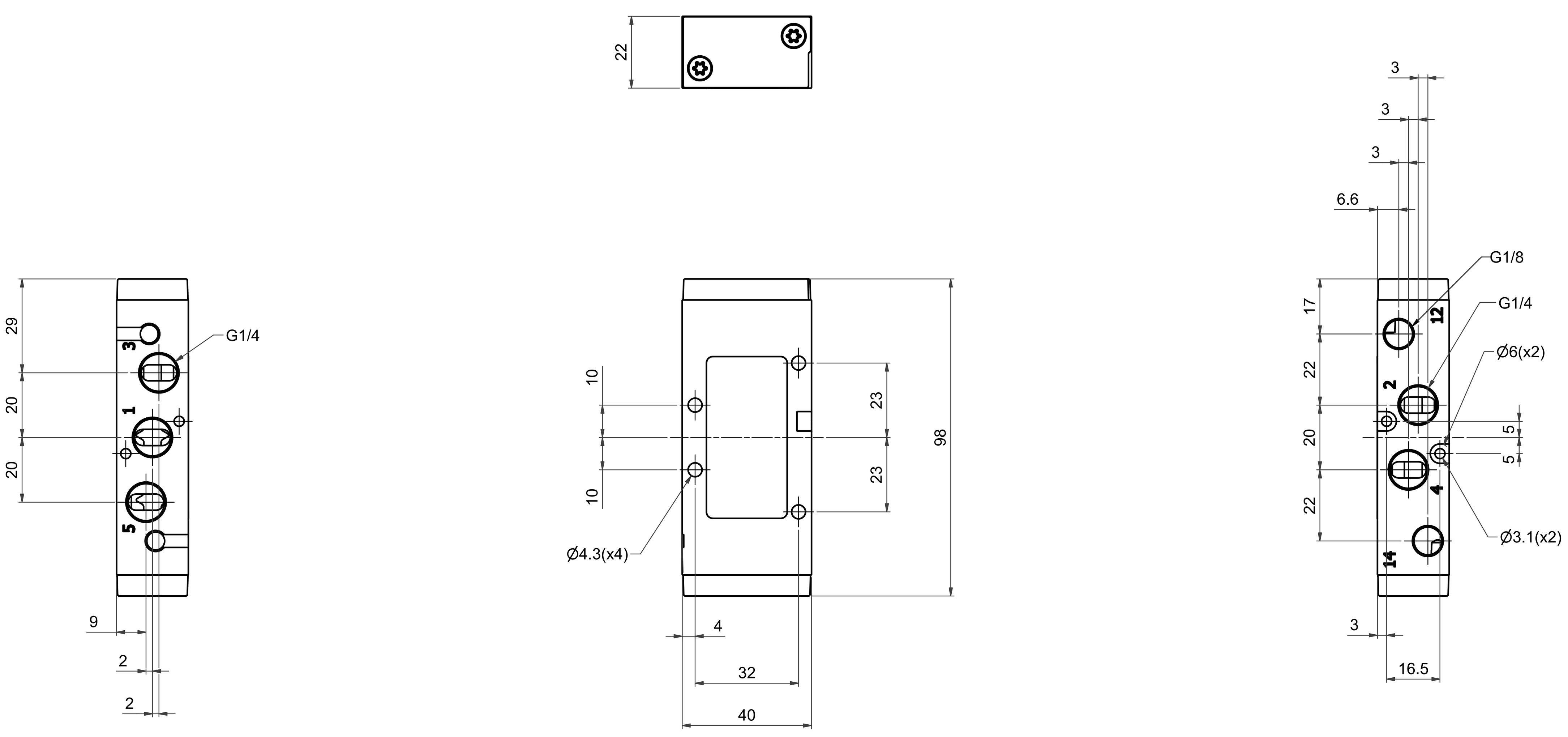

BX

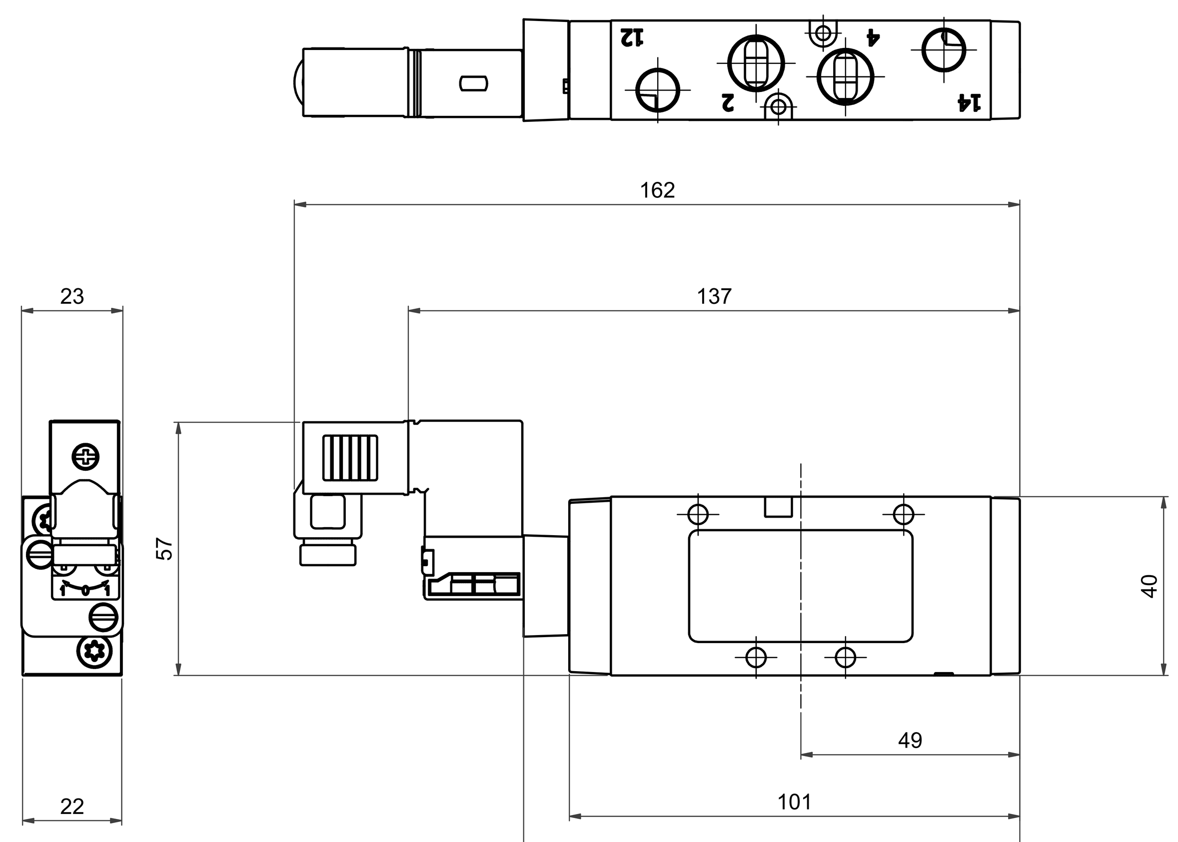

BX WITH 15mm SOLENOID

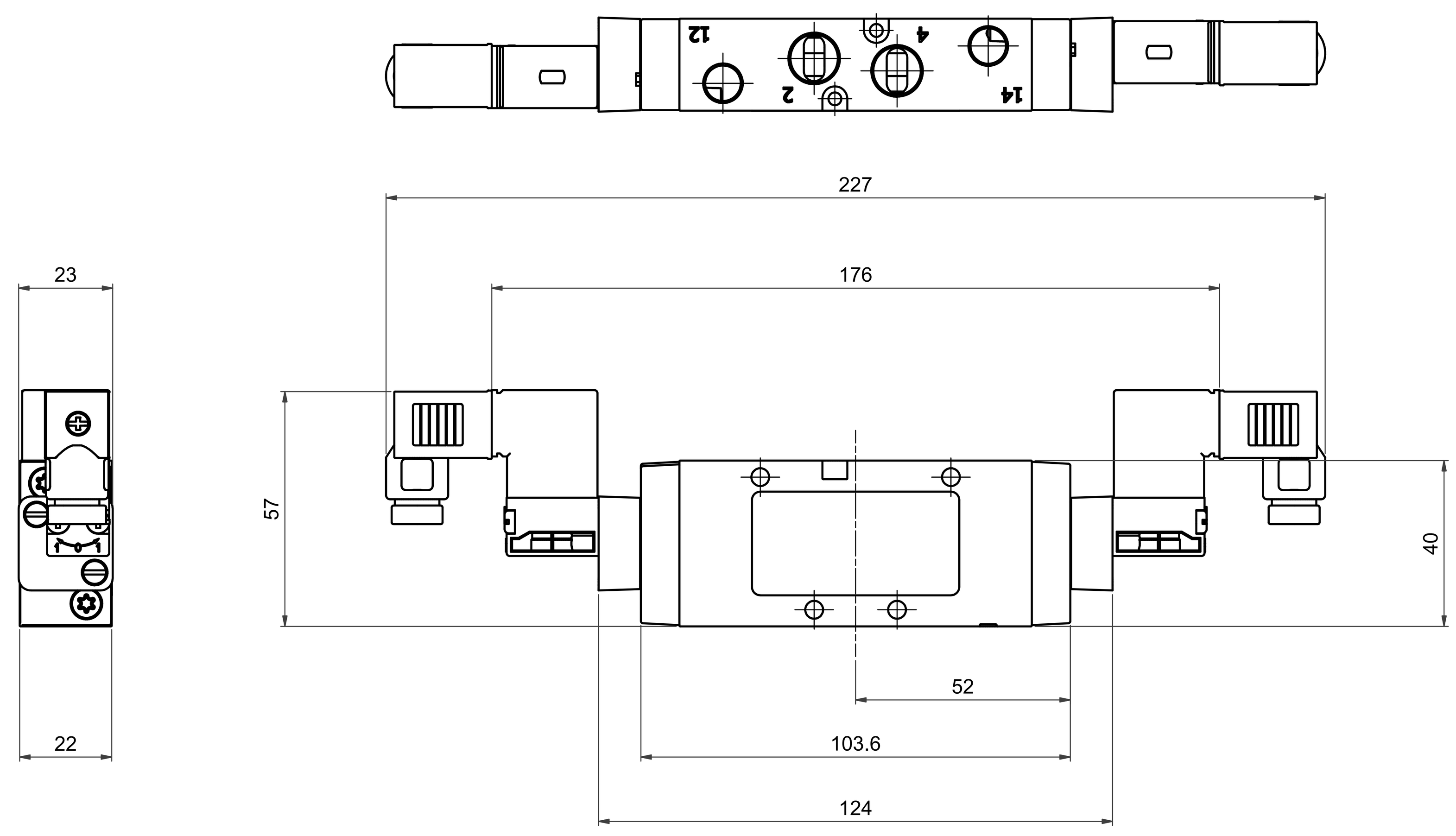

BX WITH 15mm SOLENOIDS

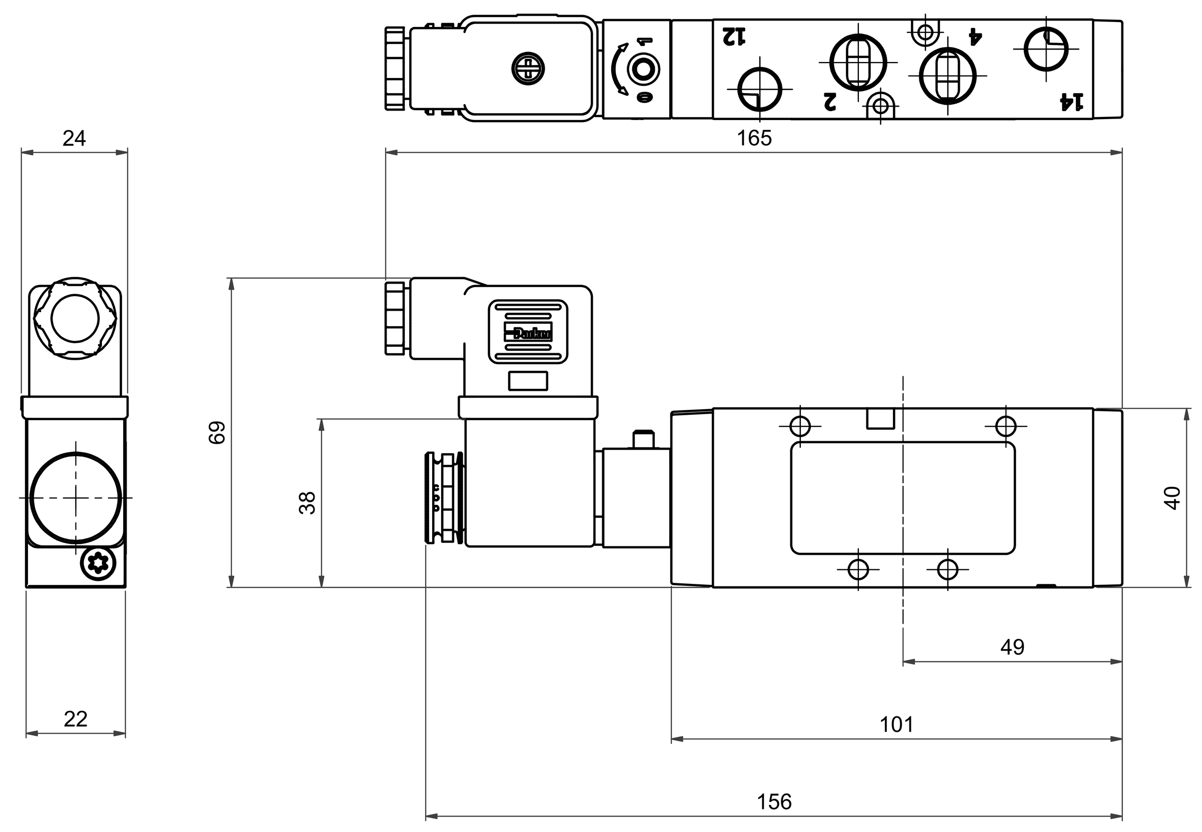

BX WITH 22mm SOLENOID

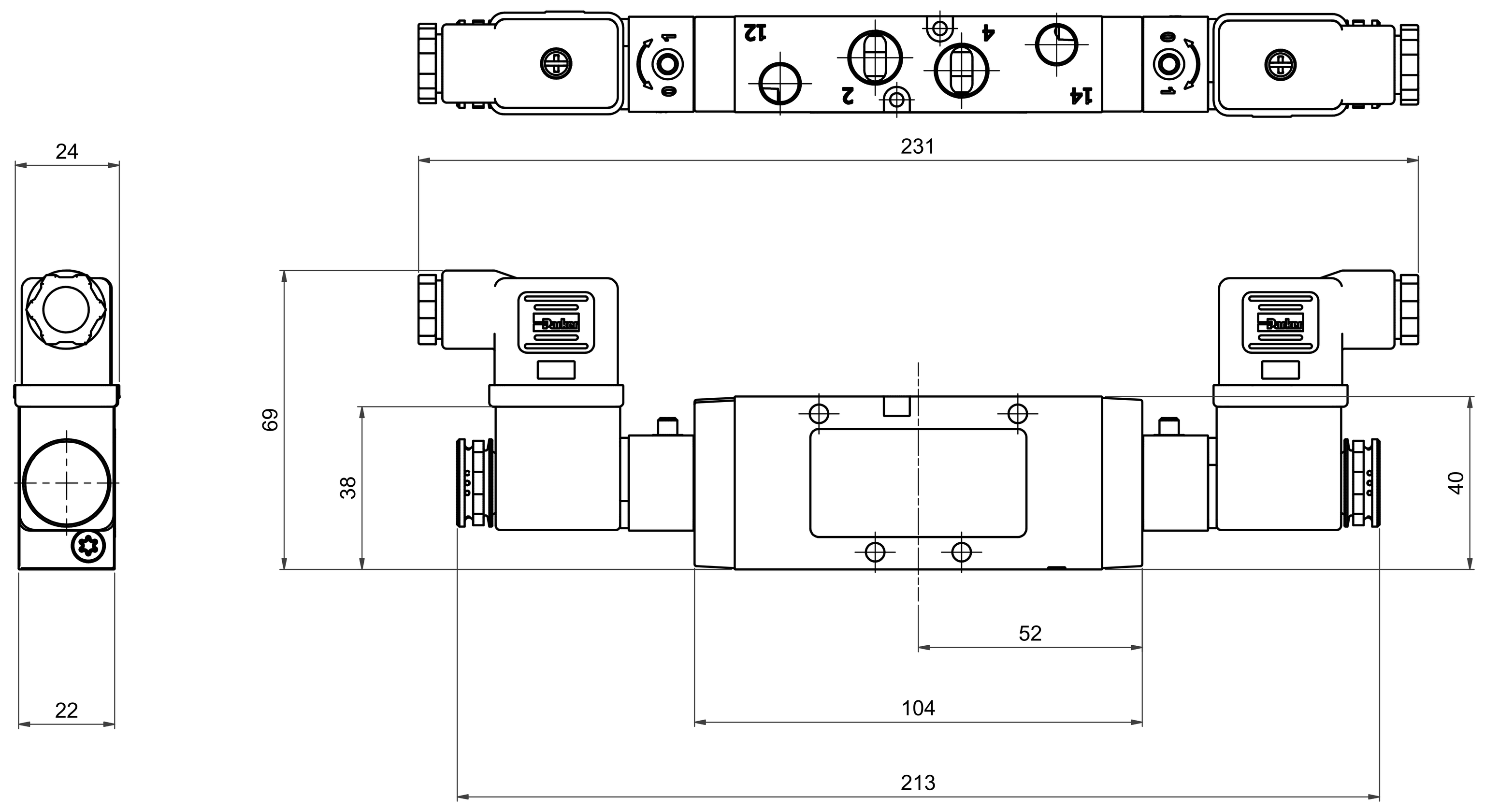

BX WITH 22mm SOLENOIDS

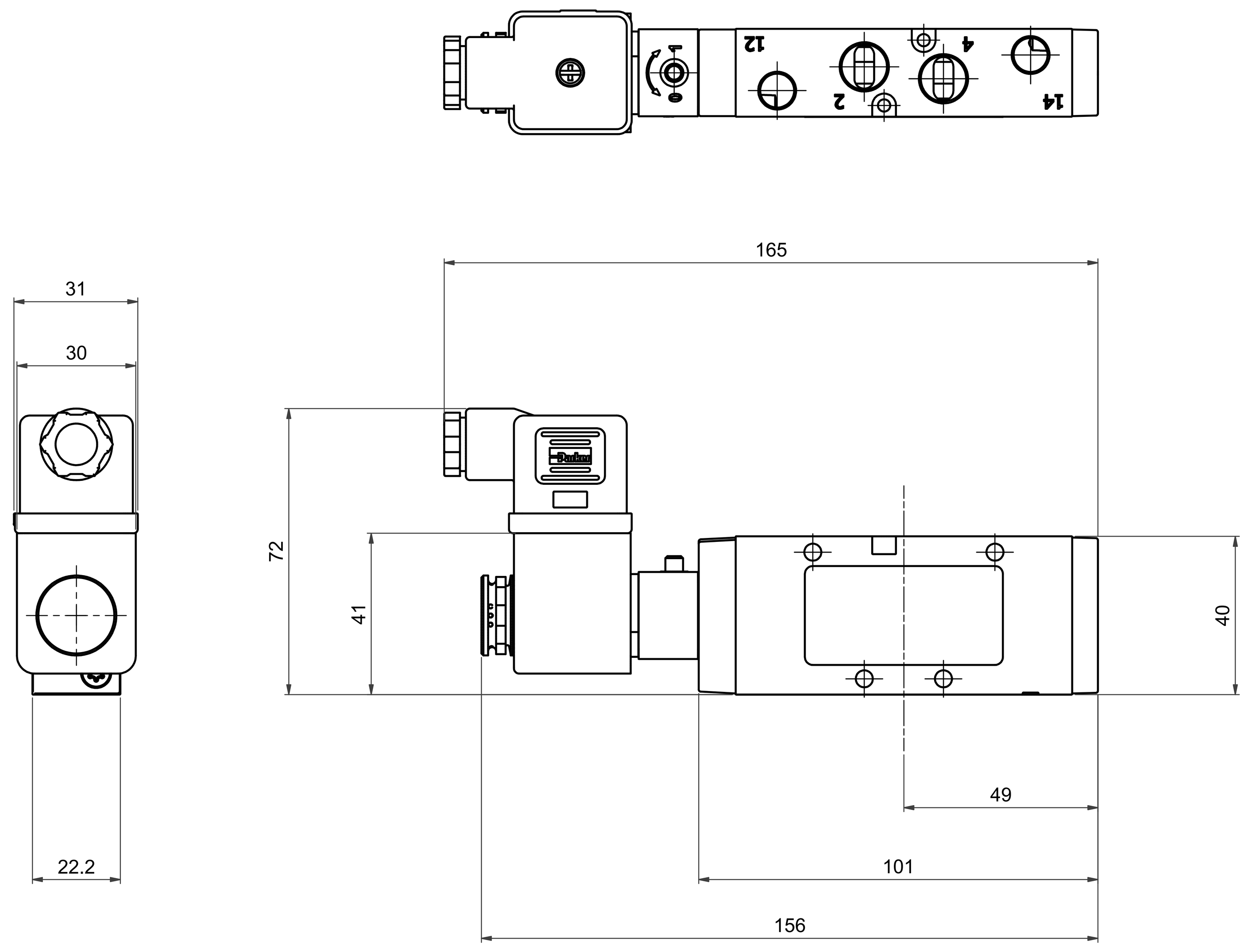

BX WITH 30mm SOLENOID

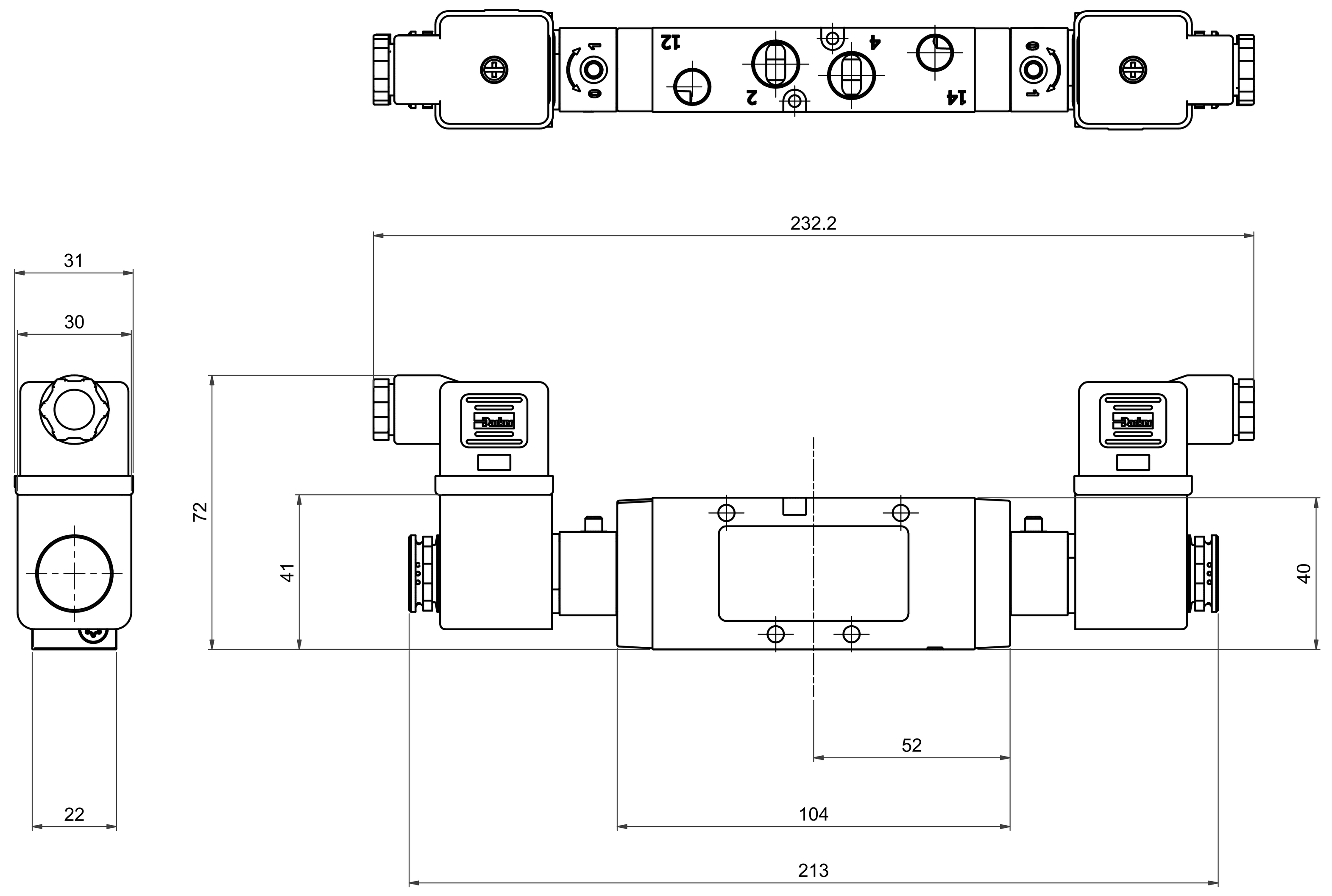

BX WITH 30mm SOLENOIDS

RGH No.	N3	N4	N5	N6	N7	N8	N9
μmm	0.1	0.2	0.4	0.8	1.6	3.2	6.4

Material -

Finish -

UNSPECIFIED RADII = R0.4 | UNSPECIFIED MACHINED SURFACES = N8

Dimensions in mm | DO NOT SCALE

CAD FILE J:\ACADUsers\Paul\P2L-BX.idw

GENERAL TOLERANCES TO ISO2768-M			ALL ANGLES ± 1°	
0 ≤ 6 ± 0.1	>6 ≤ 30 ± 0.2	>30 ≤ 120 ± 0.3	>120 ≤400 ± 0.5	> 400 ± 0.8

Drawn	Checked	Approved
PM62602 08/06/2006		

TITLE VIKING XTREME BX VALVES - G1/4 PORTS

EXP No.

Scale 1:1 | Sheet 1 of 1 | Proj. | Sheet Size A0

Drawing Number P2L-BX | Rev No. 1

Parker
COPYRIGHT © 2006
This document is copyright and the property of Parker Hannifin ltd. It must not be copied in whole or part, used for the manufacture of, or otherwise disclosed without prior written consent of the company.